MZ SERIES CAM CLUTCH

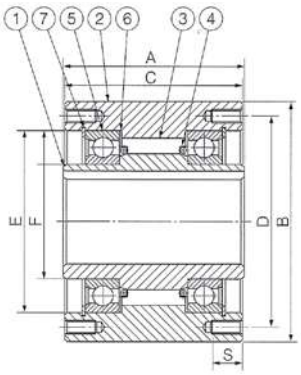

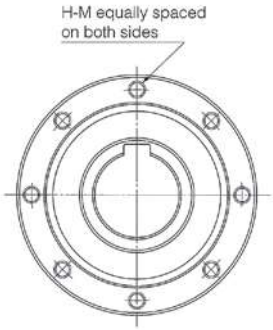

1. Inner race
2. Outer race
3. Cam
4. Spring
5. Bearing (ZZ type)
6. Side plate
7. Spirolox

MZ

Dimensions in mm

Model	Torque Capacity Nm	Max. Overrunning Speed Inner Race r/min	Max. Overrunning Speed Outer Race r/min	Max. Indexing cycle/min	Drag Torque Nm	Bore Size H7	Inner Race Keyway	A	B	C	D	E M6	F	G	H-M No. of Tapped Holes x Size x Pitch	S	Approx. Mass kg/pc
MZ15*	186	1800	900	150	0.20	15	5 x 2.3	62	68	60	58	47	25	5.5	6 x M5 x P 0.8	10	1.4
MZ17*	215	1700	800	150	0.20	17	5 x 2.3	66	75	64	64	52	28	6.3	6 x M5 x P 0.8	10	1.8
MZ20	323	1600	700	150	0.29	20	6 x 2.8	67	80	65	68	55	30	7.6	6 x M6 x P 1.0	12	2.0
MZ30-22*	735	1500	500	150	0.39	22	6 x 2.8	82	100	80	88	75	45	8.9	6 x M8 x P1.25	16	3.7
MZ30-25*						25	8 x 3.3										
MZ30						30	10 x 3.3										
MZ35	1080	1400	300	150	0.49	35	10 x 3.3	87	110	85	95	80	50	8.7	6 x M8 x P1.25	16	4.8
MZ45-40*	1620	1400	300	150	0.69	40	12 x 3.3	92	125	90	110	95	60	8.4	8 x M8 x P1.25	16	6.2
MZ45						45	14 x 3.8										
MZ60-50*	2110	1200	250	150	0.98	50	14 x 3.8	102	155	100	140	125	80	9.1	8 x M8 x P1.25	16	10.2
MZ60-55*						55	16 x 4.3										
MZ60						60	18 x 4.4										
MZ70-65*	3040	1100	250	150	1.27	65	18 x 4.4	105	175	103	162	145	95	8.6	8 x M8 x P1.25	16	13.2
MZ70						70	20 x 4.9										

*= Non-stock item

Installation and Usage

1. MZ Series Cam Clutch is shielded by shield bearings on both ends, packed with a special grease, and are ready for use. No additional lubricant is required.
2. For attaching pulleys, gears or sprockets to the clutches, insert hubs (with f7 tolerance of ISO R773) along the inner surface of the outer race and screw the bolts (high tension) into the tapped holes on the clutch end.
3. Recommended shaft tolerances are shown in the table.
4. External thrust load should be supported by other devices, not by the Cam Clutch.
5. Use only a parallel key to secure the clutch to the shaft. Do not use a tapered Key.
6. When mounting the clutch onto the shaft, apply pressure to the inner race but never to the outer race.
7. For vertical mounting, please consult TSUBAKI.
8. Ambient temperature range is -5°C to +40°C.
9. Key to be used should be in accordance with ISO R773. (DIN 6885.1)

Model	Nominal diameter (mm)	Relative shaft tolerance (mm)
MZ15	15	-0.018 to +0
MZ17	17	-0.018 to +0
MZ20	20	-0.021 to +0
MZ30	30	-0.021 to +0
MZ35	35	-0.025 to +0
MZ45	45	-0.025 to +0
MZ60	60	-0.030 to +0
MZ70	70	-0.030 to +0

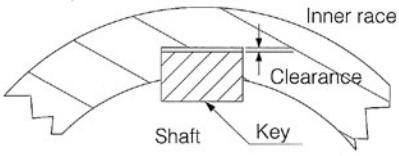

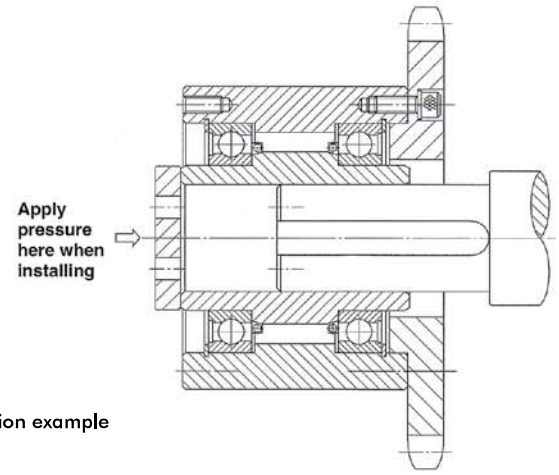

Installation example